Part Number: 633

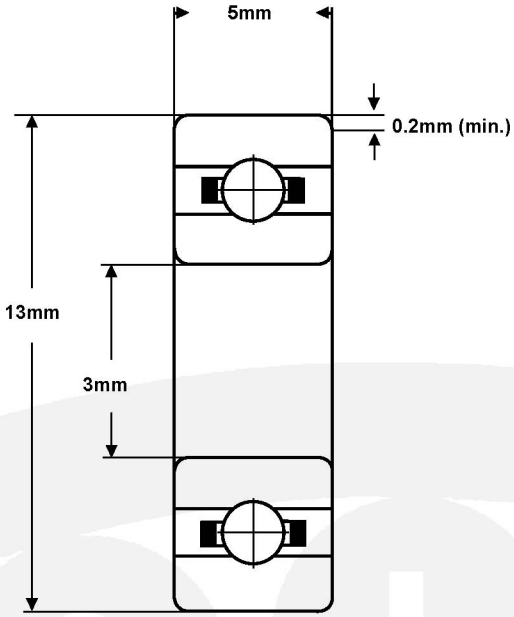

Material (rings & balls)	SAE52100 chrome steel
Material (cage)	pressed steel
Closures	None
Load rating (stat)	49 Kgf
Load rating (dyn)	130 Kgf
Speed Limit *	45,000 rpm
Standard Lubrication **	Aeroshell Fluid 12 oil

* with adequate lubrication
** may vary

These bearings comply with EU ROHS and REACH regulations.

RADIAL PLAY	MC1	MC2	MC3	MC4	MC5	MC6
(microns)	0 - 5	3 - 8	5 - 10	8 - 13	13 - 20	20 - 28

TOLERANCE	P0	P6	P5
Bore Deviation	+0 / -0.008mm	+0 / -0.007mm	+0 / -0.005mm
OD Deviation	+0 / -0.009mm	+0 / -0.008mm	+0 / -0.006mm
Width Deviation	+0 / -0.120mm	+0 / -0.120mm	+0 / -0.040mm
Single Bore Variation	8	7	4
Single OD Variation	9	10	5
Inner Width Variation	15	15	5
Outer Width Variation	15	15	5
Inner Radial Runout	10	6	4
Outer Radial Runout	15	9	6